GOES:$PM_{2.5}$

Operating Manual

CONTACT:

FTS FOREST TECHNOLOGY SYSTEMS, LTD.
1065 Henry Eng Place
Victoria, B.C., V9B 6B2
CANADA

PH: (250) 478-5561 or 1-800-548-4264
FAX: (250) 478-8579 or 1-800-905-7004

ON THE INTERNET:

Web Page: www.ftsinc.com
E-mail: info@ftsinc.com
Technical Support: service@ftsinc.com

REVISION HISTORY

Revision #	Date	Description
1	June 3, 2010	original release

Table of Contents

OPERATION **3**

GENERAL DESCRIPTION 3
Figure 1: GOES:$PM_{2.5}$ Transmitter Assembly 3
GOES Transmitter 4
GPS Antenna 4
GOES Antenna 4
Command Port 4
Status Panel 4
SYNC GPS Indicator 4
DATA Indicator 4
TRANSMIT (TX) Indicator 5
FAULT Indicator 5
DIAGNOSTIC Button 5
Sampler Communication Interface Board 5
PARTICULATE MONITOR CONNECTION 6
Mechanical Connection 6
Figure 2: GOES:$PM_{2.5}$ Transmitter Assembly Mechanical Connection 6
Electrical Connection 7
Communication 7
Power 7
E-Sampler Connection Details 8
Figure 3: GOES:$PM_{2.5}$ Transmitter to E-Sampler Connection Diagram 8
E-Sampler Internal Battery 8
E-Sampler EX-912 Option 8
Connecting an External RH Sensor 8
E-Bam Connection Details 9
Figure 4: GOES:$PM_{2.5}$ Transmitter to E-Bam Connection Diagram 9
GOES PM:2.5 CONFIGURATION 10
Transmit Parameters 10
E-SAMPLER CONFIGURATION 13
Time 13
Averaging 13
Baud Rate 13
Engineering Units 13
Concentration Units 13
E-BAM CONFIGURATION 13
Time 13
Real Time Average 13
Baud Rate 13

DEPLOYMENT 14
Transmission Cycle 14
Time Synchronization Issue 14
First Transmission Issues 14
GOES TRANSMISSION MESSAGE FORMAT 15
Sample GOES Transmission 15
TROUBLESHOOTING 16
Sampler Interface Board Communication Verification 16
Particulate Monitor Communication Verification 17
GOES Test Transmission 18
MAINTENANCE 20

SPECIFICATIONS 21

GOES:$PM_{2.5}$ 21

OPERATION

GENERAL DESCRIPTION

Forest Technology Systems' GOES:$PM_{2.5}$ is an add-on GOES transmitter for Met One E-Sampler or E-Bam particulate monitors. The transmitter assembly (Figure 1) is housed in a sealed case and attaches onto the same tripod used to hold the Met One particulate monitor. For ease of use, the transmitter assembly includes an omni directional GOES antenna to eliminate the need to aim the antenna at the satellite while electrical connections to the particulate monitor are limited to power and communications.

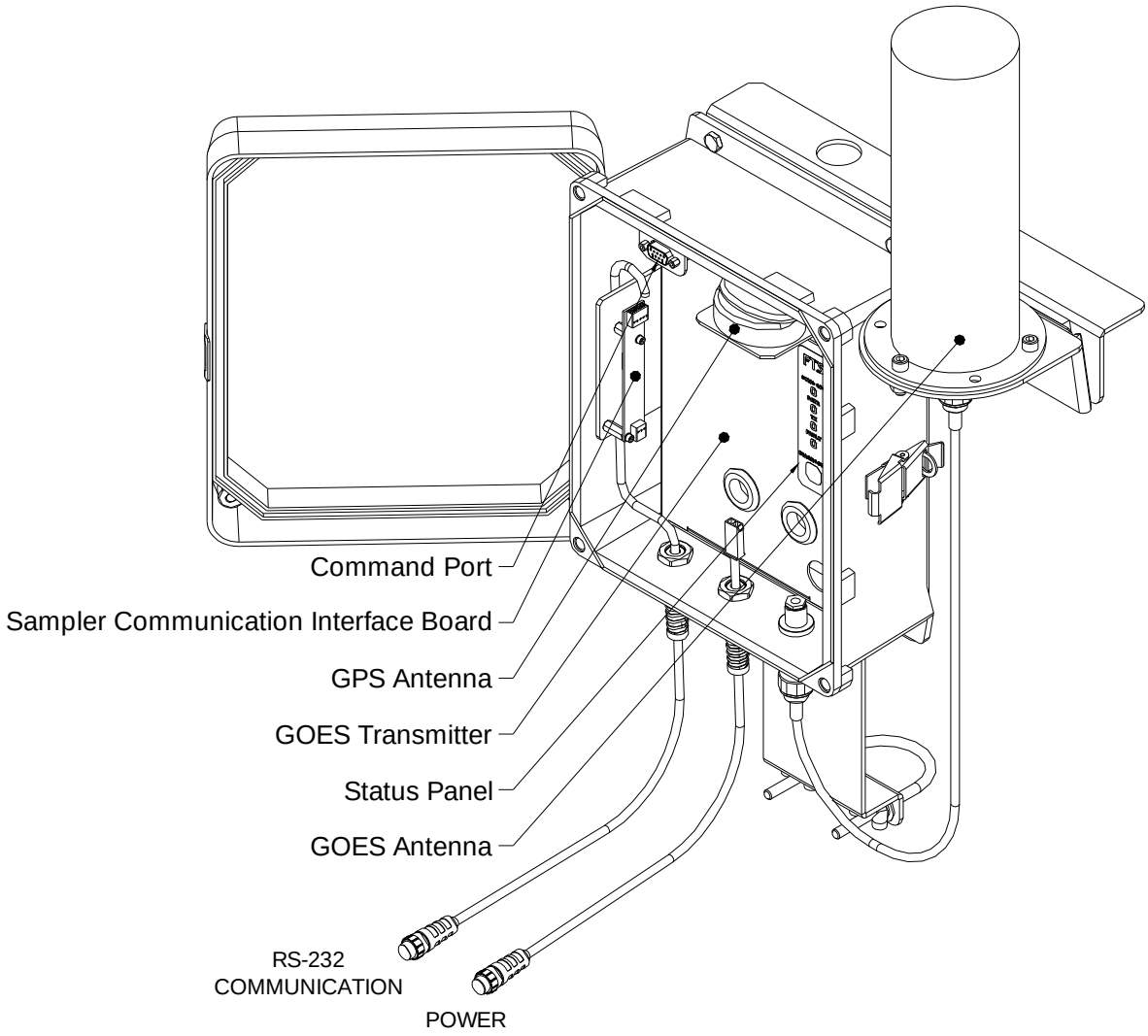

Figure 1: GOES:$PM_{2.5}$ Transmitter Assembly

The GOES:$PM_{2.5}$ transmitter assembly has several components. The function of each component labeled in Figure 1 follows.

GOES Transmitter

The GOES transmitter is the main component in the assembly. The GOES transmitter is responsible for initiating communications to the attached particulate monitor as well as performing the GOES transmissions. The GOES transmitter is manufactured by FTS and is field proven and highly reliable.

GPS Antenna

The GPS Antenna signal is used by the GOES transmitter as a timing calibration standard in order to meet the time and frequency tolerance requirements of the GOES system. The GPS antenna is housed inside the enclosure to protect the antenna from the elements.

GOES Antenna

The GOES Antenna is an omni-directional antenna used to transmit the signal from the transmitter to the GOES satellite. As omni-directional characteristic of the antenna eliminates the need for the user to orient the station in a specific direction.

Command Port

The Command Port on the GOES transmitter is an RS-232 protocol, command line, text based interface used to configure the transmitter. The Command Port can also be used to check communications with the particulate monitor and to provide operational details on the GOES transmitter.

Typically a HyperTerminal style program running on a PC is used to communicate with the transmitter. The RS-232 port settings required are: 9600 baud, 8 data bits, No parity, 1 stop bit, and no flow control.

Status Panel

The Status Panel on the GOES transmitter consists of four indicators and a pushbutton. The indicators provide visual feedback on the operation of the transmitter while the pushbutton enables the user to query the state of the transmitter failsafe circuit. Also, when power is first applied to the GOES transmitter, the transmitter will go through a sequence of self-tests indicated by cycling four times through the FAULT, TX, DATA, and SYNC GPS indicators.

SYNC GPS Indicator

After power is first applied to the GOES transmitter and the self-test cycle is completed, the SYNC GPS indicator will illuminate indicating that transmitter is acquiring a GPS fix and is trying to synchronize its clock to UTC time. The indicator will turn off when time synchronization is complete.

Note that The first GPS fix after power up will normally be acquired within five minutes; however, UTC time synchronization can take as long as 20 minutes. If during the first 20 minutes the transmitter could not synchronize to UTC time, the transmitter will switch off the GPS module for one minute and then will restart the synchronization cycle. This process continues until the transmitter synchronizes to UTC time.

Once the transmitter is synchronized to UTC time, it will be able to transmit on the specified time schedule. After initial time synchronization, the transmitter will attempt a single resynchronization to UTC time every 24 hours to correct it's time drift. The transmitter is capable of operating for 28 days without a time resynchronization. If after 28 days, a time resynchronization is not achieved, the transmitter will disable transmissions until a successful time synchronization occurs. If the transmitter cannot synchronize to UTC time for 28 days, there is likely a problem with the GPS antenna or cable.

DATA Indicator

The DATA indicator shows that the transmitter has acquired data from the particulate monitor and has stored that data in the transmitter's data buffer. The DATA indicator should be illuminated from approximately 2 minutes past the top of the hour (when the particulate monitor is read) until one minute prior to transmission time (when the transmitter empties and formats the buffer contents in preparation for transmission).

TRANSMIT (TX) Indicator

The TX indicator will illuminate at transmission time for the duration of the data transmission (about three seconds in total); however, if there is a failsafe error the FAULT indicator will blink twice to show that failsafe has been tripped and transmitter will be switched off.

FAULT Indicator

The FAULT indicator is used in conjunction with the DIAGNOSTIC button to examine the state of the transmitter's failsafe circuit. If there is a failsafe error the FAULT indicator will blink twice when the DIAGNOSTIC button is pressed.

DIAGNOSTIC Button

The Diagnostic button allows the user to query the state of the transmitter failsafe circuit and also allows the user to clear the transmitter failsafe circuit if the failsafe has been tripped. To query the state of the failsafe push and hold the 'Diagnostics' button for about 2 seconds and monitor the state of the Fault indicator. The Fault indicator will flash once if the failsafe is Ok (not tripped) or twice to indicate the failsafe has been tripped. A tripped failsafe indicates that there is a problem with the GOES transmitter. The failsafe is designed to disable a malfunctioning transmitter in order to protect other users of the satellite system from a transmitter that is transmitting for too long or too frequently. If the failsafe has tripped the transmitter will no longer transmit to the satellite and it should be returned to FTS for repair. A tripped failsafe can be cleared by depressing the Diagnostic button for at least 10 seconds.

Sampler Communication Interface Board

The Sampler Communication Interface Board is an interface between the transmitter and the particulate monitor. When requested by the transmitter, the interface retrieves and formats data from the attached particulate monitor. The interface board automatically parses data from an E-Sampler or an E-Bam and returns a common data string to the transmitter.

PARTICULATE MONITOR CONNECTION

The GOES:PM2.5 is an add-on GOES transmitter which easily connects to either a Met One E-sampler or E-Bam particulate monitor. The transmitter assembly is self-contained and easily attaches to either model particulate monitor.

Mechanical Connection

The GOES:PM2.5 transmitter assembly mounts to the tripod which holds the particulate monitor.

To mount the transmitter assembly:

1) remove the u-bolt on the bottom of the transmitter assembly
2) if installed, remove the cross-arm used to mount the external sensors.
3) slide assembly over top of the tripod
4) place the u-bolt around the tripod, through the assembly flange and tighten
5) if originally installed, reconnect the sensor cross-arm.
6) slide the GOES antenna onto its flange and secure the antenna with the grenade pin
7) connect the GOES antenna cable to the Type N connector on the bottom of the transmitter assembly

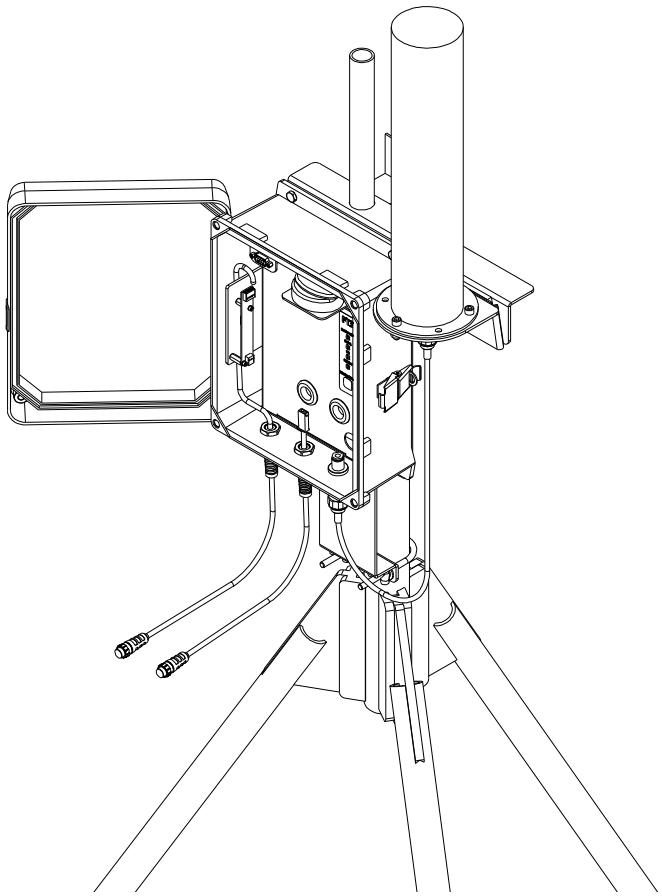

Figure 2: GOES:PM$_{2.5}$ Transmitter Assembly Mechanical Connection

Electrical Connection

The GOES:PM2.5 transmitter assembly requires only power and communication connections to the particulate monitor.

Communication

The transmitter assembly's communication cable should be connected to the particulate monitor's COMM port. The particulate monitor's COMM port is a 7 pin connection on the bottom of the monitor. The COMM port connector is the same on E-Sampler and E-Ban monitors.

IMPORTANT: The particulate monitor must be set to 9600 baud in order to communicate with the GOES:$PM_{2.5}$ transmitter assembly.

Power

Power for the GOES:PM2.5 transmitter assembly is supplied from the particulate monitor. The transmitter assembly's power cable is a 6 pin connector which connects directly to the E-sampler EXTERNAL SENSORS port or to an FTS Power Adaptor for the E-Bam. Refer to the appropriate Connection Details section for power connection specifics for each monitor type.

E-Sampler Connection Details

Communication connection between the GOES:PM2.5 transmitter assembly and Met One E-Sampler is quite simple (see Figure 3 below). However, for proper system operation, there are two power related requirements of the E-Sampler which must be met. First, the E-Sampler must have an internal battery installed. Second, the E-Sampler must have option EX-912 installed.

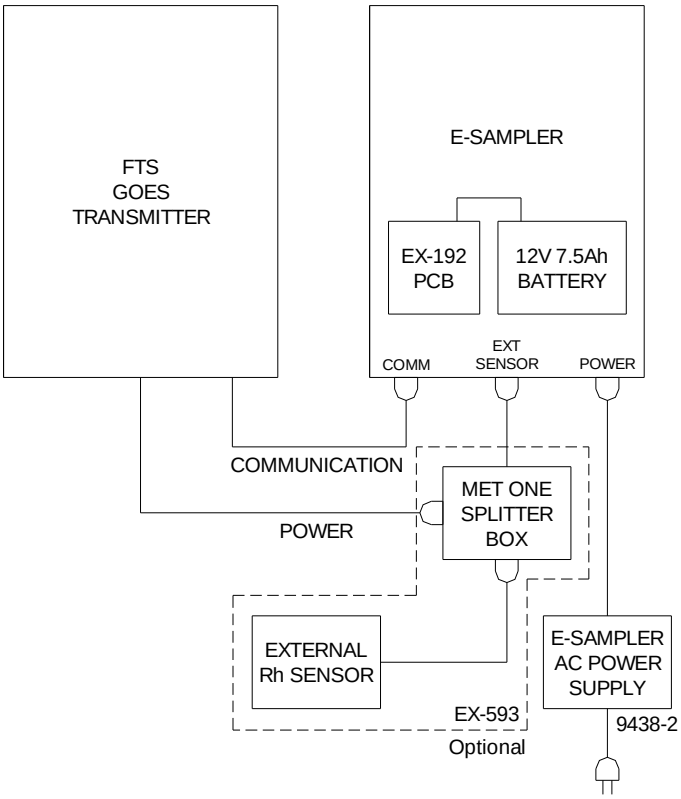

Figure 3: GOES:$PM_{2.5}$ Transmitter to E-Sampler Connection Diagram

E-Sampler Internal Battery

To mitigate potential AC power interruptions, the E-Sampler's internal battery is used to power the E-sampler as well as the GOES:$PM_{2.5}$ transmitter assembly. Install the 12V, 7.5Ah battery shipped with the transmitter assembly into the E-Sampler. Follow the instructions in the E-Sampler Operation Manual when installing the battery.

The battery should be removed from the E-Sampler when transporting the E-Sampler.

E-Sampler EX-912 Option

E-Sampler option EX-912 is required in order to make the E-Sampler's internal battery power on the EXTERNAL SENSOR connector as power for the GOES:$PM_{2.5}$ transmitter assembly. Option EX-912 can be requested when purchasing an E-Sampler or, alternately, FTS can retrofit existing E-Samplers with this option.

Connecting an External RH Sensor

If using the E-sampler's external RH sensor (Met One option EX-593) then Met One's splitter junction box (Met One part number 9427) must be used to connect the transmitter assembly and the external RH sensor to the E-Sampler's EXT Sensor port.

E-Bam Connection Details

Communication and Power connections between the GOES:$PM_{2.5}$ transmitter assembly and Met One E-Bam are both quite simple (shown in Figure 4 below). The FTS Power Adaptor is used in-line with the E-Bam power supply to provide power to the GOES:$PM_{2.5}$ transmitter assembly.

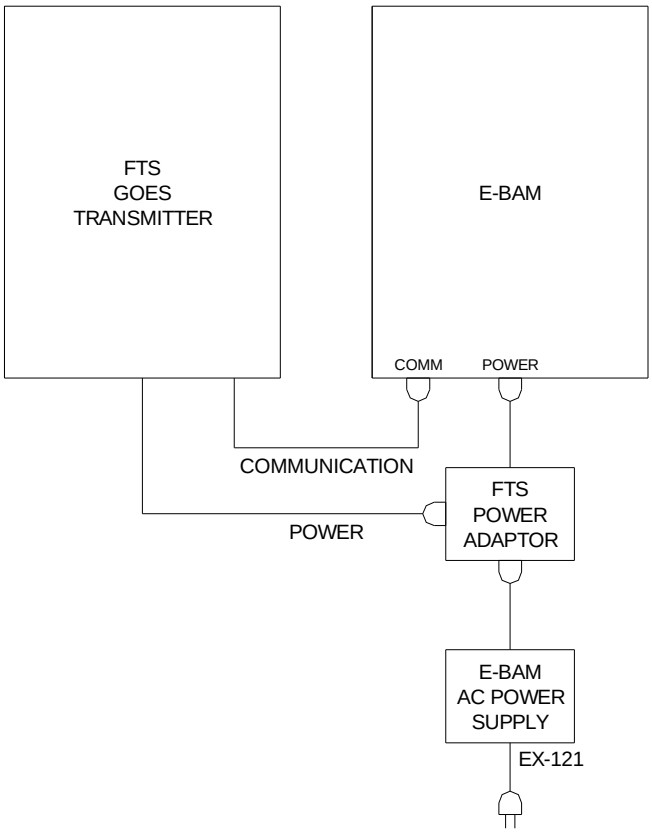

Figure 4: GOES:$PM_{2.5}$ Transmitter to E-Bam Connection Diagram

GOES PM:2.5 CONFIGURATION

Normally the GOES:$PM_{2.5}$ transmitter assembly is supplied completely preconfigured and ready for deployment. When deployed, the transmitter assembly will automatically sense which style particulate monitor is connected. However, if you are configuring (or reconfiguring) a transmitter, transmit parameters need to be entered through the Command Port in order to make the station unique and fully functional.

Transmit Parameters

Transmit parameters for the G5 are provided by the United States National Oceanic and Atmospheric Administration (NOAA). These parameters allow the user to retrieve data from their remote site using the GOES Data Collection System (DCS).

NESID : The ADDRESS (an eight character identifier) for your assignment.

Channel : Your assigned PRIME CHANNEL

Window : Your assigned XMT (transmit) WINDOW

Bit Rate : Your assigned platform baud rate

Interval : Your assigned REPORT RATE

First Tx : Your assigned FIRST TRANS time

Satellite : The GOES satellite used for your assignment (either East or West).

Following is a series of steps required for setting the transmit parameters:

1) Connect the PC to the Command Port and then start the HyperTerminal program.
2) Start a HyperTerminal text file capture so that you have a record of the Command Port session.
3) Ensure the transmitter is powered.
4) Press enter, then wait 2 seconds and then press enter again to wake the transmitter. The transmitter should respond with a > prompt.
5) Set the NESID address
   >NESID=001057E2 : for example set the NESID to 001057E2
   OK : the transmitter responds with the OK message
6) Set the Channel
   >TCH=195 : for example set the channel to 195
   OK : the transmitter responds with the OK message
7) Set the Window
   >TWL=10 : for example set the window length to 10 seconds
   OK : the transmitter responds with the OK message
8) Set the Bit Rate
   >TBR=300 : for example set the bit rate to 300 baud
   OK : the transmitter responds with the OK message
9) Set the Interval
   >TIN=00:01:00:00 : set the interval to 1 hour
   - format is days:hours:min:sec
   OK : the transmitter responds with the OK message

(continued on next page)

10) Set the First Transmit Time

```
>FTT=00:17:40          : for example set the first tx time to 17 minutes, 40 seconds
                         past the top of the hour
                           - format is hours:min:sec
OK                     : the transmitter responds with the OK message
```

11) Issue a Save command to store the parameters in the transmitter's non volatile memory.

```
>SAVE                  : save current parameters to non-volatile memory
OK                     : the transmitter responds with the OK message
```

12) Read the transmitters configuration

```
>RCFG                  : read the current configuration
NESID=1057E2           : the transmitter responds with the configuration
TCH=195
TBR=300
TIN=00:01:00:00
FTT=00:17:40
TWL=10
CMSG=N
EBM=N
TPR=S
TIL=N
TDF=A
RCH=0
RBR=0
RIN=0
RPC=0
RRC=0
RDF=A
RMC=N
IRC=*
GIN=00:00:00
CSMODE=SDI
SDF=3
SIN=01:00:00
SOF=00:02:00
SDI 0  empty
SDI 1  empty
SDI 2  empty
SDI 3  empty
SDI 4  empty
SDI 5  empty
SDI 6  empty
SDI 7  empty
SDI 8  empty
SDI 9  empty
OK                     : the transmitter responds with the OK message
```

13) Issue an Enable Transmission command

```
>ETX                   : enable transmissions
OK                     : the transmitter responds with the OK message
```

(continued on next page)

14) Read the transmitters current status

```
>RST                                    : read the transmitter's status
Transmitter: Enabled
GPS: Off
RTC: Valid
Time To Next Tx: 00:00:37:52            : this is the time until the next transmission
Timed Message Length: 0 bytes           : this is the number of bytes to be transmitted
Next Timed Tx: 2010/05/13 23:17:40
Random Message Length: 0 bytes
Random Message Tx Count: 0
Next Random Tx: N/A
Failsafe: OK
Supply voltage: 11.9 V
```

15) Close the HyperTerminal text file capture and disconnect from the Command Port.

E-SAMPLER CONFIGURATION

There are a few E-Sampler settings which need to be correctly set in order for consistent data collection and for proper system operation with the GOES:$PM_{2.5}$ transmitter. Refer to your Met One E-Sampler operation manual for details on the following settings.

Time

Set and synchronize the time on the E-Sampler to UTC time. It is important that the time is accurately set as the transmitter will request the top-of-hour data from the E-Sampler at two minutes past the hour. If the time on the E-Sampler is not accurately set then the transmitter may be supplied with the previous hour's data.

Averaging

The E-Sampler's Average Period should be set to 60 minutes as this is the standard defined by the NWCG (National Wildfire Coordinating Group).

Baud Rate

The Communications Baud Rate setting must be set to 9600 in order for the transmitter to communicate with the E-Sampler.

Engineering Units

The E-Sampler's Engineering Units should be set to Metric as this is the standard defined by the NWCG.

Concentration Units

The E-Sampler's Concentration Units should be set to mg/m^3 as this is the standard defined by the NWCG.

E-BAM CONFIGURATION

There are a few E-Bam settings which need to be correctly set in order for consistent data collection and for proper system operation with the GOES:$PM_{2.5}$ transmitter. Refer to your Met One E-Bam operation manual for details on the following settings.

Time

Set and synchronize the time on the E-Bam to UTC time. It is important that the time is accurately set as the transmitter will request the top-of-hour data from the E-Bam at two minutes past the hour. If the time on the E-Bam is not accurately set then the transmitter may be supplied with the previous hour's data.

Real Time Average

The E-Bam's Real Time Average should be set to 60 minutes as this is the standard defined by the NWCG.

Baud Rate

The Communications Baud Rate setting must be set to 9600 in order for the transmitter to communicate with the E-Bam.

DEPLOYMENT

To deploy the particulate monitor and GOES:$PM_{2.5}$ transmitter assembly, set-up the particulate monitor as per Met One instructions and then connect the GOES:$PM_{2.5}$ transmitter assembly. The transmitter assembly automatically starts operating when power is applied. Ensure the particulate monitor is synchronized to UTC time.

Transmission Cycle

Once the equipment is powered and operating, the data transmission cycle is as follows:

(1) At the top of the hour, the particulate monitor calculates the concentration average.

(2) At two minutes past the top of the hour, the transmitter reads data from the particulate monitor and illuminates the DATA indicator

(3) The DATA indicator remains illuminated until one minute prior to data transmission.

(4) At transmission time, the transmitter sends the GOES message and illuminates the TX indicator for the duration of the transmission.

(5) The cycle repeats, go back to (1).

Note that once a day, the GPS SYNC indicator will illuminate while the transmitter is updating its GPS fix. GPS updates are done on power-up and then every 24 hours afterwards.

Time Synchronization Issue

Time synchronization between the particulate monitor and GOES:$PM_{2.5}$ transmitter is necessary for timely data transmission. The transmitter is always time synchronized to UTC time and will always request the latest data from the particulate monitor at two minutes past the top of the hour. If the particulate monitor's clock was set incorrectly or has drifted so that the particulate monitor's time is more than two minutes ahead of the transmitter time, then the transmitter will end up transmitting the previous hour's particulate data. It is important for the user to ensure the particulate monitor's time is accurately set to UTC time.

First Transmission Issues

Two events need to take place after the particulate monitor / transmitter assembly is first powered in order for particulate data to be transmitted. First, the particulate monitor must obtain an hourly sample so that there is data to transmit, and second, the transmitter must acquire GPS synchronization so that it is able to transmit.

Depending on when the equipment is powered, the first expected transmission may not occur if GPS synchronization has not been obtained, or if the particulate monitor does not have valid data then the first transmission may occur but the transmission will not contain particulate data.

GOES TRANSMISSION MESSAGE FORMAT

The format of the GOES transmission is the same for E-Sampler and E-Bam particulate monitors. Transmissions occur hourly with 16 fields following the GOES header. The fields are:

Field 1.	Latitude	6 decimals	
Field 2.	Longitude	6 decimals	
Field 3.	Particulate Monitor Type 0 = E-Bam $PM_{2.5}$ 1 = E-Bam PM_{10} 9 = E-Sampler	integer	
Field 4.	Particulate Monitor Serial Number	integer	
Field 5.	Concentration RT in mg/m3	3 decimals	
Field 6.	Concentration HR in mg /m3	3 decimals	: E-Bam only
Field 7.	Flow rate in liters per minute	1 decimal	
Field 8.	Ambient Temperature in Celsius	1 decimal	
Field 9.	Ambient Humidity in %	integer	: optional sensor
Field 10.	Barometric Pressure in Pascals	integer	: E-Sampler only
Field 11.	Filter Temperature in Celsius	1 decimal	: E-Bam only
Field 12.	Internal Humidity in %	integer	
Field 13.	Wind Speed in meters/second	1 decimal	: optional sensor
Field 14.	Wind Direction in degrees	integer	: optional sensor
Field 15.	Battery voltage in Volts	1 decimal	
Field 16.	Alarm status	integer	

Note that data fields not supported by the particulate monitor will be filled with -999 and that all fields will be filled with -999 if the particulate monitor fails to respond to the transmitter. The Alarm status value is as reported by the particulate monitor.

Sample GOES Transmission

001057E210151161941G42+1NN195EXE00111	: GOES Header
48.444214	: latitude
-123.520828	: longitude
+9	: type
+5530	: serial number
+0.001	: concentration, real-time
-999	: concentration, hourly
+2.0	: flow
+24.5	: ambient temperature
+0	: ambient humidity
+100037	: barometric pressure
-999	: filter temperature
+32	: internal humidity
+0.3	: wind speed
+1	: wind direction
+14.1	: battery voltage
+0	: alarm

TROUBLESHOOTING

The Command Port can be used to verify transmitter functionality. Communications between the transmitter and connected particulate monitor can be checked. Also, a test transmission can be performed to verify the transmitter and antenna system is functional.

Sampler Interface Board Communication Verification

Following is a series of steps required for verifying communications to the Sampler Communication Interface Board:

1) Connect the PC to the Command Port and then start the HyperTerminal program.
2) Start a HyperTerminal text file capture so that you have a record of the Command Port session.
3) Ensure the transmitter is powered.
4) Press enter, then wait 2 seconds and then press enter again to wake the transmitter. The transmitter should respond with a > prompt.
5) Issue the Transparent mode command (ETM) and wait for the * prompt.

   >ETM

   *****

6) At the asterisk prompt, enter the following command **0I!** (that is: the number zero, followed by a capital letter i, followed by an exclamation mark). The sampler interface board should reply with the string "013FTS-----232-PM-v1<serial#>" where <serial#> is the serial number of the transmitter assembly.

   *** 0I!** 013FTS-----232-PM-v1<serial#>
   *****

7) Press the escape key <Esc> to exit from transparent mode and return to the > prompt.
8) Close the HyperTerminal text file capture and disconnect from the Command Port.

Particulate Monitor Communication Verification

Following is a series of steps required for verifying communications to the particulate monitor:

1) Connect the PC to the Command Port and then start the HyperTerminal program.
2) Start a HyperTerminal text file capture so that you have a record of the Command Port session.
3) Ensure the transmitter is powered.
4) Press enter, then wait 2 seconds and then press enter again to wake the transmitter. The transmitter should respond with a > prompt.
5) Issue the SDI Test (STT) and wait 3 seconds.

```
>STT
                                : the transmitter queries the particulate monitor
                                  and displays the results.
>
-1111.109985                    : latitude as supplied by the transmitter
-1111.109985                    : longitude as supplied by the transmitter
+9                              : Particulate Monitor Data
+5530
+0.000
-999
+1.9
+24.2
+0
+100291
-999
+36
+0.3
+1
+12.8
+0
```

Notes

a) Latitude and longitude values will not be correct until a GPS fix is obtained.

b) Communication to the particulate monitor is not correct if -999 is displayed in the particulate monitor data fields. Check the particulate monitor's baud rate setting to ensure it is set to 9600. Also, check the cable connection between the transmitter assembly and the particulate monitor.

6) Close the HyperTerminal text file capture and disconnect from the Command Port.

GOES Test Transmission

Following is a series of steps required for verifying communications to the particulate monitor:

1) Connect the PC to the Command Port and then start the HyperTerminal program.
2) Start a HyperTerminal text file capture so that you have a record of the Command Port session.
3) Ensure the transmitter is powered.
4) Press enter, then wait 2 seconds and then press enter again to wake the transmitter. The transmitter should respond with a > prompt.
5) Switch to transmitter to technician mode (case sensitive).
   >techmode alpha
   OK
6) Disable transmissions.
   >dtx
   OK
7) Disable automatic gps synchronization.
   >das
   Automatic GPS synchronization process disabled
8) Turn the oven controlled oscillator (ocxo) on.
   >ocxoon
   OK
9) Wait 90 seconds for the ocxo to stabilize.
10) Issue test transmission (the TX indicator will illuminate for approximately 7 seconds).
   >ftx 4,195,300 : see notes below.

Notes

c) Use 195 if your assignment is on the GOES East satellite.
d) Use 196 if your assignment is on the GOES West satellite.
e) Check the transmission using the EDDN field message retrieval webpage (http://eddn.usgs.gov/fieldtest.html). The transmitted test message should be:

```
001057E210134143556G42-1NN195EXE00392    : GOES header
Operator Initiated Test Transmission:    : Test Message
Operator Initiated Test Transmission:
Operator Initiated Test Transmission:
Operator Initiated Test Transmission:
Operator Initiated Test Transmission:
Operator Initiated Test Transmission:
Operator Initiated Test Transmission:
Operator Initiated Test Transmission:
Operator Initiated Test Transmission:
Operator Initiated Test Transmission:
```

(continued on next page)

11) Get the last transmission status.

```
>ltxs
Tx Status: OK
Tx Type:  Test Message
Last Tx Length:  0 bytes                    : A test transmission always shows 0 bytes
Last Tx Start Time:  2000/01/01 00:06:16
Last Tx Stop Time:  2000/01/01 00:06:27     : Tx time is 11 seconds
Forward Power: 40.4 dBm
Reflected Power: 9.0 dBm
SWR: 1.05
Power Supply: 11.9 V
```

12) Turn the ocxo off.

```
>ocxooff
OK
```

13) Enable automatic gps synchronization.

```
>eas
Automatic GPS synchronization process enabled
```

14) Enable transmissions.

```
>etx
OK
```

15) Close the HyperTerminal text file capture and disconnect from the Command Port.

MAINTENANCE

The GOES:$PM_{2.5}$ transmitter assembly should not require recalibration. Field maintenance required by the GOES:$PM_{2.5}$ transmitter assembly is limited to a periodic check of cables and connectors for deterioration.

Please contact FTS technical support for information on return of the module for calibration or if the unit ceases to operate properly (refer to the inside cover page for contact information).

Refer to your E-Sampler or E-Bam operating manual for maintenance details for your particulate monitor.

SPECIFICATIONS

GOES:$PM_{2.5}$

NESDIS Certification Number	**0405019** : model G5a-QD
Nominal Transmit Power	
300 BPS	11.2 ± 1.0 W
1200 BPS	11.2 + 1.0 W
Antenna Requirements	
GOES Antenna	3 dBic right hand circular polarization
GPS Antenna	3.3V active patch
Operating Voltage Range	10.8 to 16 Vdc
Current Consumption	
Standby	less than 5 mA
GPS On	less than 50 mA
GOES Transmit	less than 2.6 A
Operating Temperature Range	-40 to +60 °C
Command Port Serial Interface	RS-232
Command Port Communication Protocol	ASCII

THIS PAGE INTENTIONALLY LEFT BLANK